MAYTAG

TECHNICAL SPECIFICATIONS

Model Q5RF Series Rev A

ENERGY STAR PARTNER

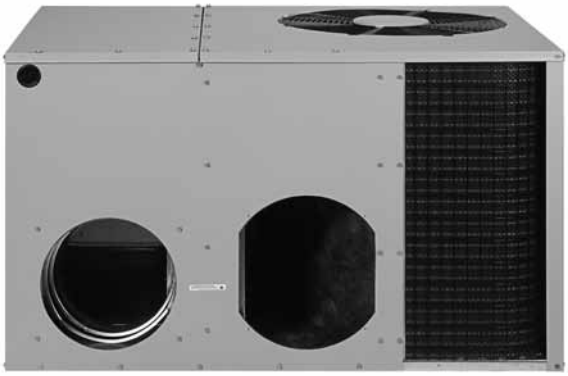

M120 Product Line

Single Packaged Heat Pump
15 SEER — 12 EER, 8.0 HSPF 2 - 5 Ton Units R-410A

- **12 YEAR ALL PARTS WARRANTY**
- **This product offers a 1 Year Dependability Promise to replace the unit if the compressor fails in the first year of operation, to the original owner.**
- **Product registration required for 12-year All Parts Warranty and Dependability Promise within a limited period of time after the installation. See current warranty document for details.**

ENERGY STAR

Dependable Quality Warranty

The Q5RF Series Rev A single packaged heat pumps are high efficiency self contained cooling and heating units that can be installed on a slab. Units are ETL and ETLc listed.

Features and Benefits

- **R-410A Refrigerant** Environmentally Friendly.
- **State-of-the-art Copeland Ultra Tech II Scroll compressor** provides two stage heat/cool.
- **Designed using galvanized steel** with a polyester urethane coat finish. The 950 hour salt spray finish resists corrosion 50% better than comparable units.
- **Coils** are designed to optimize heat transfer, minimize size and cost, and increase durability and reliability.
- **The service valves are easily accessible** and simplify servicing of the refrigeration system.
- **A wire guard coated with Earth Friendly Epoxy and mesh hail guard that will never rust** protects the coil from being damaged by balls, lawnmowers, hail, etc.
- **Designed to make servicing easier** for the contractor, access panels are provided to all major components and the compressor.
- **0" clearance** to combustibles on duct side of the unit allows for installations in tight areas.
- **Easy access** to evaporator for cleaning and general maintenance.
- **Drain trap** design optimizes drainage capabilities.
- **Easy to install** electric heat strip provides up to 20 kw of heat output.
- **Compact footprint and profile** make the Q5 Series easy to install and transport.
- **Suction Accumulator –** Protection from liquid flood back and future compressor failures.
- **Demand Defrost Standard** provides additional energy savings in heating by defrosting only when necessary.
- **Three Minute Restart Time Delay –** When the unit shuts down, a three minute delay keeps the unit from restarting, eliminating the highest cause for compressor failure.
- **High and Low Pressure Switches** added Compressor Protection.
- **Quiet Operation and Low Vibration** swept-wing fan blade combined with custom Venturi condenser fan.
- **Compressor sound blanket is standard.**
- **Protected Distributor Tubes** Both indoor and outdoor coils include very high abrasion resistance fiberglass sleeves to prevent leaks from tubing rubbing together.
- **Energy Efficient Brushless –** DC (ECM) Blower motor in all models, and ECM condenser fan motor in 4 and 5 ton models.

DIMENSIONS

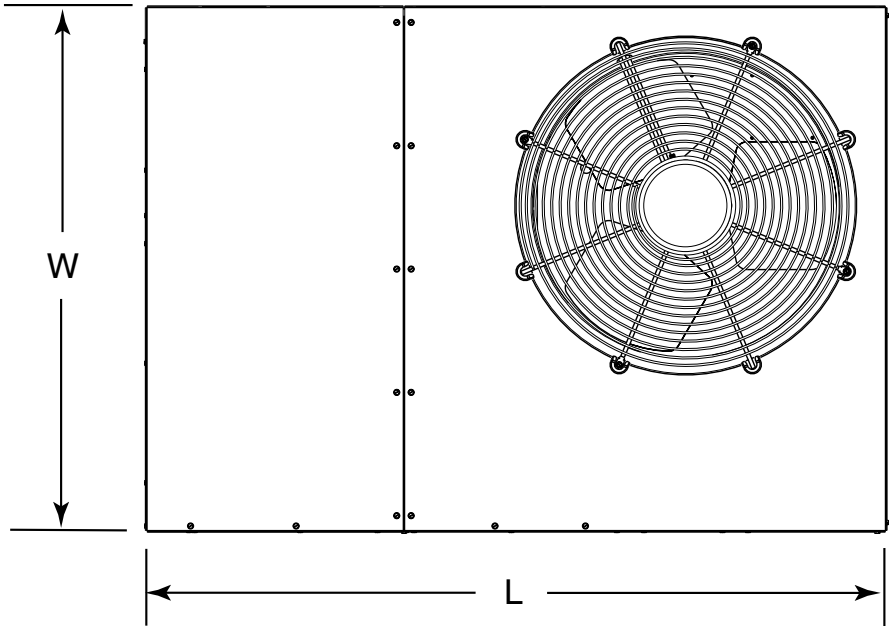

Top View

Model Number Q5RF-	(L) Length	(W) Width	(H) Height	A	B
X24KA	49	35	30.2	40.15	7.61
X36KA	49	35	30.2	35.02	2.48
X48KA	49	35	38.2	35.02	2.48
X60KA	63	35	38.2	35.02	2.48

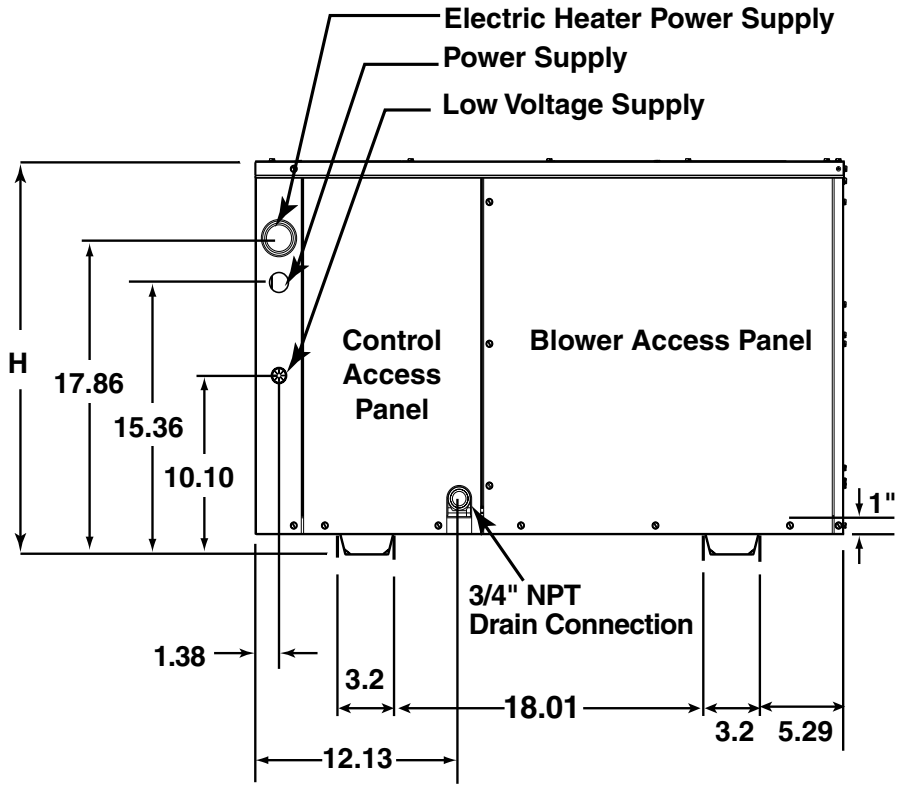

Side View

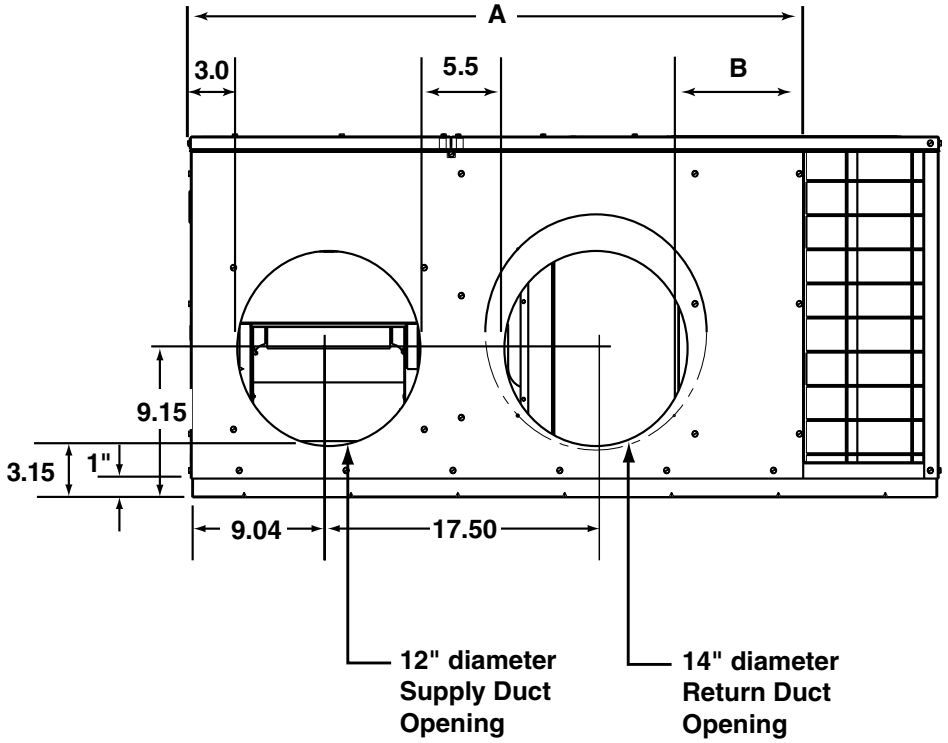

Back (Duct) View

ELECTRICAL DATA

Q5RF SERIES - 208/230V - SINGLE PHASE MODELS									
MODEL NUMBER Q5RF-	HEATER KW	MCA	MOP	CIRCUIT A (Compressor, Blower & Fan)		CIRCUIT B (Heater Only)		CIRCUIT C (Heater Only)	
				MCA	MOP	MCA	MOP	MCA	MOP
X24KA	0	19.6	30	-	-	-	-	-	-
	5	44.6	50	-	-	-	-	-	-
	8	59.2	60	-	-	-	-	-	-
	10	69.6	70	19.6	30	50	60	-	-
X36KA	0	24.1	35	-	-	-	-	-	-
	5	49.1	50	-	-	-	-	-	-
	8	63.7	70	24.1	35	39.6	40	-	-
	10	74.1	80	24.1	35	50	60	-	-
	15	99.1	100	49.1	50	50	60	-	-
X48KA	0	35.7	50	-	-	-	-	-	-
	5	60.7	70	35.7	50	25	30	-	-
	8	75.3	80	35.7	50	39.6	40	-	-
	10	85.7	90	35.7	50	50	60	-	-
	15	110.7	125	60.7	70	50	60	-	-
	20	135.7	150	-	-	-	-	-	-
	20 (3 circuit)	-	-	35.7	50	50	60	50	60
X60KA	0	45.2	70	-	-	-	-	-	-
	5	70.2	90	45.2	70	25	30	-	-
	8	84.8	100	45.2	70	39.6	40	-	-
	10	95.2	110	45.2	70	50	60	-	-
	15	120.2	125	70.2	90	50	60	-	-
	20	145.2	150	-	-	-	-	-	-
	20 (3 circuit)	-	-	45.2	70	50	60	50	60

NOTE: If electric heat is installed, and the overcurrent rating exceeds 60A, internal circuit breakers must be installed in addition to branch circuit protection at the distribution panel.

IDENTIFICATION CODE

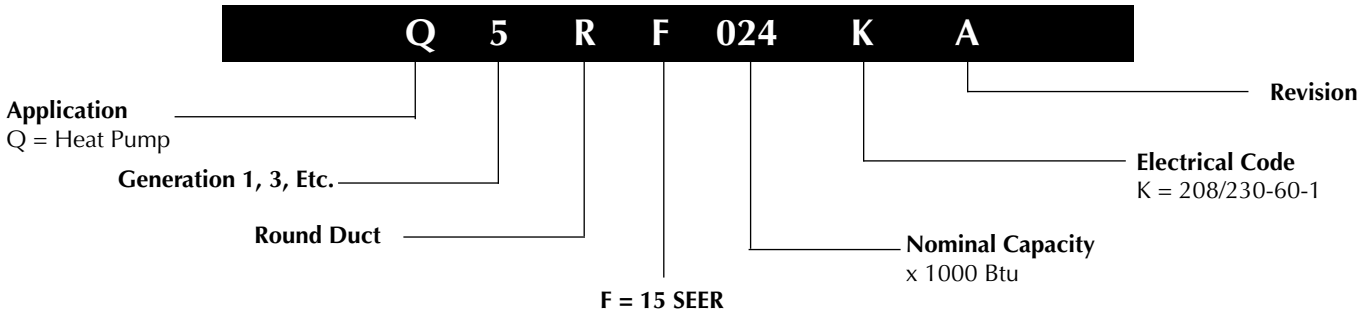

ELECTRICAL SPECIFICATIONS

Model No. Q5RF-	X24KA	X36KA	X48KA	X60KA
Capacities				
Cooling BTU/h	24,000	34,600	46,500	55,000
SEER	15	15	15	15
EER	12	12	12	12
Heating BTU/h 47° F	23,000	34,600	44,000	56,000
HSPF	8.0	8.0	8.0	8.0
Sound Rating	72	71	70	71
Electric Rating — 60 Hz (a)				
Operating Voltage Range	187 - 253	187 - 253	187 - 253	187 - 253
Min. Circuit Ampacity (a)	19.6	24.1	35.7	45.2
Field Wire Size — AWG (a)	10	10	8	6
Delay Fuse — Max. (b)	30	35	50	70
Total Unit — AMPS	16.7	20.3	30.4	38.0
Compressor				
Volts	208 - 230	208 - 230	208 - 230	208 - 230
Rated Load Amps	11.7	15.3	21.2	28.8
Lock Rotor Amps	58.3	83.0	104.0	152.9
Condenser Motor				
Fan Motor — HP - RPM	1/5 - 825	1/4 - 1100	1/2 - 2 speeds	1/2 - 2 speeds
Fan Motor — Amps	1.2	1.2	3.8	3.8
Fan Dia. — CFM	20" - 2800	20″ - 3000	20″ - 3400	24″ - 4000
Evaporator Motor - 5 speed (ECM)				
Blower Motor — HP	1/2	1/2	3/4	3/4
Blower Motor — Amps	3.8	3.8	5.4	5.4
Refrigerant (R-410A) — Oz.	136	143	189	260
Shipping Weight -- Lbs.	313	320	398	443

(a) Amperage and wire size based on refrigeration system only with 60° C wire, 50 ft. length. See Electrical Data tables for supplemental electric heaters. Refer to National Electric Code for additional derating factors for field installed conductors.
(b) Use time delay fuse or "HACR" type circuit breaker.

HEATER APPLICATION MATRIX

Model Number Q5RF-	H3HK-005H-01B 917166B	H3HK-008H-01B 917167B	H3HK-010H-01B 917168B	H3HK-015H-01B 917169B	H3HK-020H-01B 917170B	H3HK-015H-21B 917172B	H3HK-020H-21B 917173B
X24KA	X(0)	X(0)	X(2)	NA	NA	NA	NA
X36KA	X (0)	X(2)	X(2)	X(2)	NA	X(0)	NA
X48KA	X (2)	X(2)	X(2)	X(2)	X(3)	X(0)	X(1)
X60KA	X (2)	X(2)	X(2)	X(2)	X(3)	X(0)	X(1)

NA = Not Approved
( ) = Number of internal circuit breaker kits required.
X = Branch Circuit Protection Only
NOTE: Blower Performance heating values based on 10kw heater kit for 024K, and 036K. 15kw values used for 048K.

IDENTIFICATION CODE

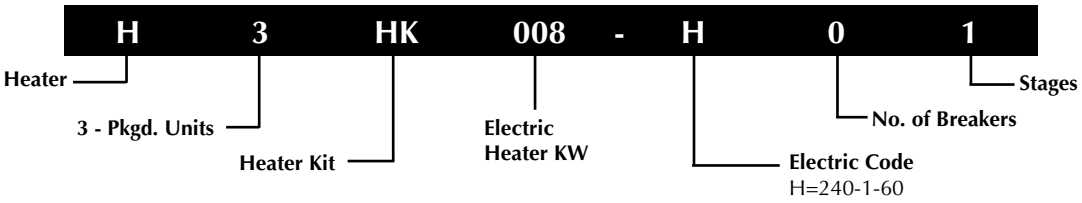

ACCESSORIES

Description	Part Number
4-Pole single circuit adaptor	913350
6-Pole single circuit adaptor	913556
Circuit Breaker Single Phase (2-pole)	913554
Extreme High Wind Kit - Ground Mount	920908

BLOWER PERFORMANCE - ECM

Model Number		External Static Pressure Drop (in WC)							
Q5RF-		0.1	0.2	0.3	0.4	0.5	0.6	0.7	0.8
X24KA	Tap T1*	535	485	445					
	Tap T2**	765	700	635	590	520			
	Tap T3***	1180	1140	1100	1050	1000	650	900	840
	Tap T4	1302	1260	1220	1172	1127	1090	1035	985
	Tap T5	1450	1410	1377	1335	1293	1245	1205	1160
X36KA	Tap T1*	875	832	775	715	659	599	555	
	Tap T2**	1267	1229	1181	1135	1099	1045	994	790
	Tap T3	1380	1340	1305	1260	1220	1180	1130	1075
	Tap T4***	1440	1400	1365	1320	1280	1235	1195	1145
	Tap T5	1500	1460	1420	1380	1340	1290	1250	1210
X48KA	Tap T1*	1030	980	950	900	860	810	765	725
	Tap T2	1275	1225	1195	1145	1105	1055	1015	975
	Tap T3**	1525	1504	1460	1422	1380	1353	1305	1271
	Tap T4***	1710	1665	1638	1609	1575	1530	1493	1449
	Tap T5	1790	1760	1727	1701	1665	1627	1587	1553
X60KA	Tap T1*	1140	1094	1051	1005	954	901	850	802
	Tap T2	1375	1340	1310	1252	1235	1172	1160	1108
	Tap T3**	1691	1659	1623	1586	1544	1504	1468	1424
	Tap T4***	1722	1692	1653	1615	1579	1539	1498	1454
	Tap T5	1841	1804	1771	1731	1703	1659	1614	1578

* Denotes factory set low cooling & heating speed

** Denotes factory set high cooling & heating speed

*** Denotes factory set auxillary heating speed

COPPER WIRE SIZE — AWG (1% Voltage Drop)				
Supply Wire Length-Feet				Supply Circuit Ampacity
200	150	100	50	
6	8	10	14	15
4	6	8	12	20
4	6	8	10	25
4	4	6	10	30
3	4	6	8	35
3	4	6	8	40
2	3	4	6	45
2	3	4	6	50

Wire Size based on N.E.C. for 60° type copper conductors.

HEAT PUMP COOLING EXPANDED RATINGS

Q5RF-X24KA High Speed

O.D.T			65°F			75°F			85°F			95°F			105°F			115°F		
CFM	E.D.B.	E.W.B.	T.C.	S.C.	K.W.	T.C.	S.C.	K.W.	T.C.	S.C.	K.W.	T.C.	S.C.	K.W.	T.C.	S.C.	K.W.	T.C.	S.C.	K.W.
700	80	62	25.2	19.7	1.44	24.3	19.7	1.59	23.3	19.9	1.74	22.1	19.5	1.92	20.9	20.4	2.13	19.6	19.2	2.38
	80	67	27.3	18.4	1.45	26.3	18.0	1.60	25.2	17.7	1.76	23.9	17.2	1.93	22.5	16.7	2.14	21.0	15.1	2.39
	80	72	29.9	12.7	1.47	28.8	12.7	1.61	27.5	12.9	1.77	25.9	12.7	1.94	24.2	12.4	2.15	22.5	12.5	2.40
	75	62	25.0	16.8	1.44	24.1	16.7	1.59	23.1	16.8	1.74	21.9	16.5	1.92	20.6	15.0	2.13	19.2	16.1	2.38
800	80	62	25.9	21.4	1.45	25.0	22.0	1.59	23.9	21.5	1.75	22.8	21.2	1.92	21.6	20.7	2.14	20.3	20.1	2.39
	80	67	28.0	19.6	1.46	26.9	19.4	1.61	25.7	18.9	1.76	24.5	18.4	1.93	23.0	18.0	2.15	21.4	17.4	2.40
	80	72	30.3	13.5	1.47	28.9	14.1	1.61	27.7	13.7	1.77	26.2	13.5	1.94	24.7	13.5	2.16	22.9	13.4	2.40
	75	62	25.7	18.1	1.45	24.7	18.5	1.59	23.6	18.0	1.75	22.4	17.8	1.92	21.1	17.7	2.14	19.6	17.5	2.38
900	80	62	26.5	23.2	1.45	25.6	23.4	1.60	24.6	22.6	1.75	23.5	22.1	1.93	22.3	21.4	2.14	21.0	20.9	2.39
	80	67	28.5	20.9	1.46	27.4	20.6	1.61	26.2	20.1	1.76	24.9	19.6	1.94	23.4	19.1	2.15	21.8	18.6	2.40
	80	72	30.6	14.5	1.48	29.4	14.8	1.62	28.1	14.3	1.77	26.7	14.3	1.95	25.0	14.1	2.16	23.3	14.1	2.41
	75	62	26.2	19.5	1.45	25.2	19.7	1.60	24.1	19.2	1.75	22.9	19.1	1.93	21.5	18.8	2.14	20.0	18.7	2.39

Q5RF-X24KA Low Speed

O.D.T			65°F			75°F			85°F			95°F			105°F			115°F		
CFM	E.D.B.	E.W.B.	T.C.	S.C.	K.W.	T.C.	S.C.	K.W.	T.C.	S.C.	K.W.	T.C.	S.C.	K.W.	T.C.	S.C.	K.W.	T.C.	S.C.	K.W.
550	80	62	18.4	15.3	0.96	17.9	15.3	1.09	17.1	15.3	1.23	16.2	15.0	1.38	15.2	15.0	1.56	14.2	14.0	1.76
	80	67	20.0	13.9	0.95	19.4	13.7	1.07	18.5	13.4	1.21	17.5	13.0	1.37	16.3	12.5	1.55	15.1	11.4	1.76
	80	72	21.8	9.6	0.93	20.9	9.5	1.05	19.9	9.7	1.20	18.8	9.4	1.35	17.5	9.1	1.54	16.2	9.2	1.75
	75	62	18.3	12.7	0.97	17.7	12.6	1.09	16.9	12.7	1.23	16.0	12.3	1.39	14.9	11.1	1.57	13.8	12.0	1.77
650	80	62	19.1	16.9	0.96	18.6	17.2	1.08	17.8	16.6	1.22	17.0	16.0	1.38	16.0	15.4	1.56	14.9	14.8	1.76
	80	67	20.6	15.2	0.94	19.9	15.0	1.06	19.0	14.6	1.20	17.9	14.2	1.36	16.7	13.8	1.55	15.5	13.3	1.75
	80	72	22.1	10.2	0.93	21.4	10.7	1.04	20.4	10.3	1.18	19.2	10.1	1.35	17.9	10.0	1.54	16.5	9.9	1.75
	75	62	18.8	13.9	0.96	18.3	14.2	1.09	17.4	13.8	1.22	16.4	13.6	1.38	15.3	13.4	1.56	14.1	13.2	1.77
750	80	62	19.9	18.1	0.95	19.3	18.0	1.07	18.6	17.3	1.21	17.6	16.7	1.37	16.6	16.0	1.55	15.4	15.4	1.75
	80	67	21.1	16.4	0.94	20.4	16.2	1.06	19.4	15.8	1.20	18.3	15.3	1.36	17.1	14.8	1.54	15.8	14.3	1.75
	80	72	22.6	11.1	0.92	21.8	11.3	1.04	20.8	10.9	1.18	19.6	10.8	1.34	18.2	10.6	1.53	16.8	10.4	1.74
	75	62	19.3	15.2	0.96	18.7	15.4	1.07	17.8	15.0	1.22	16.8	14.8	1.38	15.6	14.5	1.56	14.4	14.2	1.76

Q5RF-X36KA High Speed

O.D.T			65°F			75°F			85°F			95°F			105°F			115°F		
CFM	E.D.B.	E.W.B.	T.C.	S.C.	K.W.	T.C.	S.C.	K.W.	T.C.	S.C.	K.W.	T.C.	S.C.	K.W.	T.C.	S.C.	K.W.	T.C.	S.C.	K.W.
1050	80	62	35.9	29.3	2.15	34.5	29.0	2.34	33.1	29.2	2.57	31.5	28.6	2.82	29.7	29.2	3.13	27.9	27.4	3.47
	80	67	38.8	26.2	2.19	37.3	25.7	2.37	35.7	25.4	2.59	34.0	24.7	2.85	32.0	24.0	3.15	29.8	22.0	3.49
	80	72	42.4	18.3	2.24	40.8	18.2	2.41	39.0	18.6	2.63	37.0	18.2	2.88	34.8	17.9	3.18	32.0	18.2	3.52
	75	62	36.1	24.5	2.16	34.7	24.4	2.36	33.2	24.5	2.59	31.6	24.0	2.86	29.7	21.9	3.17	27.6	23.6	3.52
1200	80	62	36.9	31.6	2.16	35.5	32.1	2.35	34.0	31.3	2.57	32.4	30.6	2.83	30.8	29.8	3.14	28.9	28.7	3.48
	80	67	39.7	28.0	2.20	38.2	27.8	2.38	36.5	27.1	2.60	34.7	26.5	2.86	32.6	26.0	3.16	30.3	25.3	3.50
	80	72	43.2	19.5	2.24	41.4	20.4	2.42	39.5	19.8	2.63	37.3	19.6	2.89	35.1	19.6	3.18	32.5	19.6	3.52
	75	62	37.0	26.3	2.17	35.5	26.9	2.37	34.0	26.3	2.60	32.3	26.0	2.87	30.4	25.8	3.18	28.2	25.6	3.53
1350	80	62	37.8	33.9	2.17	36.4	33.9	2.36	35.0	32.6	2.58	33.5	31.8	2.84	31.8	30.7	3.15	29.8	29.7	3.49
	80	67	40.4	29.9	2.21	38.9	29.6	2.39	37.1	28.9	2.61	35.3	28.3	2.86	33.2	27.7	3.16	30.8	27.0	3.50
	80	72	43.4	21.0	2.25	41.7	21.5	2.42	39.9	20.9	2.64	37.8	20.9	2.89	35.5	20.7	3.19	33.0	20.8	3.53
	75	62	37.7	28.5	2.18	36.2	28.7	2.38	34.6	28.0	2.61	32.9	27.8	2.87	30.9	27.5	3.19	28.7	27.3	3.54

Q5RF-X36KA Low Speed

O.D.T			65°F			75°F			85°F			95°F			105°F			115°F		
CFM	E.D.B.	E.W.B.	T.C.	S.C.	K.W.	T.C.	S.C.	K.W.	T.C.	S.C.	K.W.	T.C.	S.C.	K.W.	T.C.	S.C.	K.W.	T.C.	S.C.	K.W.
770	80	62	25.8	21.5	1.37	24.6	21.3	1.52	23.4	21.3	1.71	22.2	20.8	1.93	21.0	20.7	2.19	19.7	19.4	2.47
	80	67	27.8	19.6	1.37	26.7	19.1	1.52	25.4	18.8	1.71	24.0	18.3	1.93	22.5	17.7	2.19	20.8	16.3	2.48
	80	72	30.8	13.4	1.33	29.4	13.3	1.49	28.1	13.6	1.68	26.4	13.3	1.90	24.4	13.0	2.17	22.6	13.1	2.46
	75	62	25.5	17.9	1.39	24.3	17.7	1.54	23.1	17.7	1.72	21.8	17.3	1.94	20.4	15.7	2.20	18.9	17.0	2.49
870	80	62	26.4	23.1	1.37	25.3	23.4	1.52	24.2	22.6	1.70	23.1	21.8	1.92	21.8	21.1	2.18	20.4	20.2	2.47
	80	67	28.5	20.9	1.37	27.2	20.6	1.51	25.9	20.1	1.70	24.5	19.6	1.92	22.9	19.1	2.19	21.2	18.5	2.48
	80	72	31.3	14.2	1.33	29.8	14.8	1.48	28.1	14.3	1.68	26.6	14.1	1.90	24.9	14.1	2.16	23.0	14.0	2.46
	75	62	26.1	19.1	1.39	24.9	19.5	1.54	23.6	19.0	1.72	22.3	18.7	1.94	20.9	18.6	2.20	19.3	18.3	2.49
970	80	62	27.1	24.7	1.36	26.1	24.3	1.51	25.0	23.3	1.70	23.8	22.6	1.92	22.5	21.7	2.18	21.0	20.9	2.47
	80	67	29.0	22.2	1.36	27.7	21.8	1.51	26.4	21.3	1.70	24.9	20.8	1.92	23.3	20.3	2.18	21.6	19.7	2.47
	80	72	31.3	15.2	1.33	30.0	15.5	1.48	28.5	15.0	1.67	26.9	15.0	1.90	25.2	14.8	2.17	23.3	14.8	2.46
	75	62	26.6	20.6	1.38	25.3	20.7	1.53	24.1	20.2	1.72	22.7	20.0	1.94	21.3	19.7	2.20	19.7	19.5	2.48

HEAT PUMP COOLING EXPANDED RATINGS CONTINUED

Q5RF-X48KA High Speed

O.D.T			65°F			75°F			85°F			95°F			105°F			115°F		
CFM	E.D.B.	E.W.B.	T.C.	S.C.	K.W.	T.C.	S.C.	K.W.	T.C.	S.C.	K.W.	T.C.	S.C.	K.W.	T.C.	S.C.	K.W.	T.C.	S.C.	K.W.
1400	80	62	49.7	40.2	2.91	47.8	39.9	3.18	45.5	40.0	3.49	43.0	39.2	3.84	40.5	39.8	4.26	38.0	37.4	4.76
	80	67	53.9	33.6	2.95	51.7	33.2	3.22	49.2	33.2	3.53	46.5	32.4	3.89	43.6	31.7	4.31	40.5	29.7	4.81
	80	72	58.5	25.0	2.98	56.1	24.8	3.26	53.3	25.3	3.58	50.3	24.7	3.94	47.1	24.2	4.37	43.7	24.6	4.87
	75	62	49.4	33.5	2.91	47.5	33.2	3.18	45.2	33.3	3.49	42.7	32.6	3.85	40.0	29.6	4.26	37.2	32.0	4.75
1550	80	62	50.8	42.8	2.92	48.8	43.6	3.19	46.5	42.5	3.50	44.0	41.6	3.85	41.7	40.2	4.28	39.1	38.8	4.78
	80	67	54.9	35.5	2.95	52.6	36.1	3.23	50.0	35.1	3.54	47.2	34.5	3.90	44.2	34.2	4.32	41.1	33.8	4.82
	80	72	59.2	26.2	2.99	56.7	27.3	3.27	54.0	26.5	3.59	50.8	26.2	3.95	47.5	26.2	4.38	44.1	26.2	4.88
	75	62	50.4	35.4	2.92	48.4	36.2	3.19	46.0	35.3	3.50	43.4	34.7	3.85	40.6	34.5	4.27	37.8	34.2	4.76
1700	80	62	51.8	45.8	2.93	49.8	45.9	3.20	47.5	44.3	3.51	45.2	42.9	3.87	42.7	41.3	4.30	40.1	39.9	4.80
	80	67	55.7	37.8	2.96	53.4	37.9	3.23	50.7	37.0	3.55	47.8	36.6	3.91	44.8	36.0	4.33	41.6	35.7	4.83
	80	72	59.9	28.0	3.00	57.3	28.6	3.27	54.4	27.7	3.59	51.3	27.6	3.96	48.0	27.3	4.39	44.6	27.5	4.89
	75	62	51.2	37.8	2.92	49.1	38.1	3.20	46.7	37.1	3.50	44.0	36.8	3.86	41.2	36.3	4.28	38.3	36.1	4.77

Q5RF-X48KA Low Speed

O.D.T			65°F			75°F			85°F			95°F			105°F			115°F		
CFM	E.D.B.	E.W.B.	T.C.	S.C.	K.W.	T.C.	S.C.	K.W.	T.C.	S.C.	K.W.	T.C.	S.C.	K.W.	T.C.	S.C.	K.W.	T.C.	S.C.	K.W.
1000	80	62	35.3	28.8	1.76	33.9	28.6	2.02	32.3	28.6	2.31	30.3	27.9	2.64	28.3	27.8	3.02	26.2	25.8	3.43
	80	67	38.3	24.4	1.74	36.9	24.1	2.00	35.1	24.0	2.30	33.0	23.4	2.63	30.7	22.7	3.00	28.0	20.9	3.42
	80	72	42.1	18.0	1.72	40.4	18.0	1.98	38.5	18.3	2.28	36.1	17.8	2.62	33.5	17.3	2.99	30.6	17.4	3.40
	75	62	35.1	23.9	1.76	33.7	23.7	2.02	32.0	23.8	2.32	30.0	23.1	2.64	27.7	20.4	3.02	25.2	22.3	3.44
1100	80	62	36.1	30.5	1.75	34.7	31.1	2.02	33.0	30.3	2.31	31.2	29.4	2.64	29.2	28.2	3.01	27.0	26.8	3.43
	80	67	39.1	25.7	1.73	37.6	26.0	2.00	35.8	25.3	2.29	33.6	24.8	2.62	31.2	24.4	3.00	28.4	23.8	3.42
	80	72	42.6	18.8	1.71	41.0	19.7	1.98	38.9	19.1	2.28	36.6	18.8	2.62	34.0	18.7	2.98	31.1	18.4	3.40
	75	62	35.8	25.2	1.76	34.3	25.8	2.02	32.6	25.0	2.32	30.6	24.6	2.64	28.2	24.2	3.02	25.7	23.8	3.44
1200	80	62	36.8	32.5	1.75	35.4	32.6	2.01	33.8	31.5	2.31	32.0	30.4	2.63	30.0	29.0	3.00	27.8	27.6	3.42
	80	67	39.7	27.2	1.73	38.2	27.3	1.99	36.3	26.6	2.29	34.1	26.2	2.62	31.6	25.6	2.99	28.8	25.1	3.42
	80	72	43.0	20.1	1.71	41.4	20.5	1.98	39.4	19.9	2.28	37.1	19.7	2.61	34.4	19.4	2.98	31.4	19.3	3.40
	75	62	36.4	26.8	1.75	34.9	27.0	2.02	33.1	26.3	2.31	31.0	26.0	2.64	28.7	25.5	3.02	26.1	25.1	3.44

Q5RF-X60KA High Speed

O.D.T			65°F			75°F			85°F			95°F			105°F			115°F		
CFM	E.D.B.	E.W.B.	T.C.	S.C.	K.W.	T.C.	S.C.	K.W.	T.C.	S.C.	K.W.	T.C.	S.C.	K.W.	T.C.	S.C.	K.W.	T.C.	S.C.	K.W.
1550	80	62	58.9	49.9	3.54	56.7	49.3	3.84	54.3	49.2	4.18	51.7	47.9	4.58	48.8	46.9	5.05	45.1	44.8	5.61
	80	67	64.2	41.9	3.61	61.7	41.0	3.90	59.1	39.9	4.24	56.2	38.8	4.64	53.0	37.5	5.10	48.7	35.8	5.67
	80	72	70.2	33.7	3.67	67.6	32.8	3.98	64.7	31.7	4.32	61.5	30.6	4.71	57.9	29.4	5.18	53.2	27.8	5.74
	75	62	58.7	42.4	3.55	56.5	41.4	3.84	54.1	40.3	4.18	51.5	39.2	4.59	48.5	37.9	5.05	44.7	36.2	5.61
1700	80	62	60.2	52.6	3.56	57.8	52.6	3.86	55.4	51.9	4.19	52.7	51.0	4.59	49.9	49.4	5.06	46.3	46.3	5.63
	80	67	65.3	44.0	3.62	62.8	43.0	3.91	60.1	41.9	4.26	57.1	40.8	4.65	53.8	39.5	5.11	49.4	37.8	5.68
	80	72	71.3	35.0	3.69	68.6	34.1	3.99	65.6	33.0	4.33	62.3	31.9	4.73	58.6	30.7	5.19	53.7	29.1	5.76
	75	62	59.9	44.5	3.56	57.6	43.4	3.86	55.1	42.3	4.20	52.4	41.2	4.59	49.3	39.8	5.06	45.3	38.1	5.62
1850	80	62	61.3	55.8	3.57	58.9	55.2	3.87	56.4	54.9	4.21	53.8	53.3	4.61	51.0	51.0	5.07	47.5	47.5	5.65
	80	67	66.3	46.0	3.64	63.8	45.0	3.93	61.0	43.9	4.27	57.9	42.7	4.66	54.5	41.4	5.13	50.0	39.7	5.70
	80	72	72.3	36.3	3.71	69.5	35.3	4.00	66.5	34.3	4.34	63.1	33.2	4.74	59.3	31.9	5.20	54.3	30.3	5.77
	75	62	60.9	46.5	3.57	58.5	45.4	3.87	55.9	44.3	4.21	53.1	43.1	4.60	50.0	41.8	5.06	46.0	40.0	5.63

Q5RF-X60KA Low Speed

O.D.T			65°F			75°F			85°F			95°F			105°F			115°F		
CFM	E.D.B.	E.W.B.	T.C.	S.C.	K.W.	T.C.	S.C.	K.W.	T.C.	S.C.	K.W.	T.C.	S.C.	K.W.	T.C.	S.C.	K.W.	T.C.	S.C.	K.W.
1075	80	62	42.1	35.4	2.12	40.5	35.1	2.41	38.5	35.0	2.74	36.2	33.9	3.09	33.6	33.0	3.50	31.1	31.1	3.95
	80	67	46.1	29.8	2.10	44.3	29.1	2.39	42.2	28.2	2.71	39.6	27.2	3.08	36.8	26.2	3.48	33.7	25.0	3.93
	80	72	50.6	23.9	2.07	48.6	23.2	2.37	46.3	22.4	2.69	43.6	21.4	3.06	40.5	20.4	3.46	37.2	19.4	3.92
	75	62	42.0	30.1	2.12	40.4	29.4	2.41	38.4	28.5	2.74	36.1	27.5	3.10	33.5	26.4	3.50	30.6	25.2	3.95
1175	80	62	43.0	37.4	2.12	41.4	37.5	2.41	39.3	36.9	2.73	36.9	36.1	3.09	34.5	34.5	3.49	32.0	32.0	3.94
	80	67	47.0	31.2	2.09	45.1	30.5	2.39	42.9	29.6	2.71	40.3	28.6	3.08	37.4	27.5	3.48	34.2	26.4	3.95
	80	72	51.4	24.8	2.06	49.5	24.1	2.36	47.0	23.3	2.69	44.2	22.3	3.06	41.1	21.3	3.46	37.7	20.2	3.91
	75	62	42.9	31.5	2.12	41.2	30.8	2.41	39.1	29.9	2.73	36.7	28.9	3.09	34.0	27.8	3.50	31.0	26.5	3.95
1275	80	62	43.8	39.7	2.11	42.1	39.3	2.40	40.0	39.2	2.73	37.7	37.7	3.09	35.4	35.4	3.49	32.9	32.9	3.94
	80	67	47.7	32.6	2.09	45.8	31.9	2.37	43.5	31.0	2.71	40.9	30.0	3.07	37.9	28.9	3.48	34.7	27.7	3.93
	80	72	52.2	25.7	2.06	50.2	25.0	2.36	47.6	24.1	2.69	44.8	23.2	3.05	41.5	22.2	3.46	38.1	21.1	3.91
	75	62	43.6	32.9	2.11	41.9	32.2	2.41	39.8	31.3	2.73	37.3	30.3	3.09	34.5	29.1	3.49	31.5	27.9	3.95

HEAT PUMP HEATING EXPANDED RATINGS

Q5RF-X24KA High Speed

100	Indoor T.	10			17			20			30			40			47			50			60		
CFM	Deg.F	MBH	COP	kW	MBH	COP	kW	MBH	COP	kW	MBH	COP	kW	MBH	COP	kW	MBH	COP	kW	MBH	COP	kW	MBH	COP	kW
700	60	11.2	2.13	1.54	13.5	2.52	1.57	14.5	2.69	1.58	17.8	3.21	1.63	21.2	3.71	1.67	23.5	4.05	1.71	24.5	4.19	1.72	27.9	4.63	1.76
	70	10.6	2.09	1.49	12.8	2.44	1.54	13.7	2.58	1.56	16.8	3.03	1.63	19.9	3.44	1.70	22.1	3.71	1.74	23.0	3.82	1.77	26.1	4.17	1.83
	80	10.0	2.01	1.46	12.0	2.32	1.52	12.9	2.45	1.54	15.7	2.85	1.62	18.6	3.21	1.70	20.6	3.44	1.76	21.5	3.54	1.78	24.3	3.83	1.86
800	60	11.2	2.08	1.58	13.6	2.48	1.61	14.6	2.64	1.62	18.0	3.17	1.67	21.4	3.68	1.71	23.8	4.02	1.74	24.8	4.16	1.75	28.2	4.61	1.80
	70	10.7	2.04	1.54	12.9	2.39	1.58	13.9	2.54	1.60	17.0	2.99	1.67	20.2	3.41	1.74	22.4	3.68	1.78	23.3	3.80	1.80	26.5	4.16	1.87
	80	10.1	1.98	1.50	12.2	2.29	1.56	13.1	2.42	1.58	16.0	2.82	1.66	18.9	3.18	1.75	21.0	3.41	1.80	21.8	3.50	1.83	24.8	3.80	1.91
900	60	11.4	2.05	1.63	13.8	2.44	1.65	14.8	2.61	1.66	18.2	3.14	1.70	21.7	3.65	1.74	24.1	3.99	1.77	25.1	4.14	1.78	28.5	4.60	1.82
	70	10.8	2.02	1.57	13.1	2.37	1.62	14.0	2.51	1.64	17.2	2.97	1.70	20.4	3.39	1.77	22.7	3.66	1.81	23.6	3.78	1.83	26.8	4.14	1.90
	80	10.3	1.96	1.54	12.3	2.26	1.60	13.2	2.39	1.62	16.1	2.78	1.71	19.1	3.13	1.79	21.1	3.36	1.85	22.0	3.45	1.87	25.0	3.75	1.95

Q5RF-X24KA Low Speed

		OUTDOOR TEMPERATURE (Deg. F)																							
100	Indoor T.	10			17			20			30			40			47			50			60		
CFM	Deg.F	MBH	COP	kW	MBH	COP	kW	MBH	COP	kW	MBH	COP	kW	MBH	COP	kW	MBH	COP	kW	MBH	COP	kW	MBH	COP	kW
550	60	7.6	1.70	1.30	9.4	2.12	1.31	10.2	2.29	1.31	12.9	2.88	1.32	15.6	3.45	1.32	17.4	3.85	1.33	18.2	4.02	1.33	20.9	4.59	1.34
	70	7.1	1.71	1.22	8.8	2.08	1.24	9.5	2.23	1.25	11.9	2.73	1.28	14.3	3.20	1.31	16.0	3.52	1.33	16.7	3.65	1.34	19.1	4.08	1.37
	80	6.5	1.65	1.15	8.0	1.99	1.18	8.6	2.13	1.19	10.8	2.58	1.23	13.0	2.99	1.27	14.5	3.27	1.30	15.1	3.39	1.31	17.3	3.75	1.35
650	60	7.6	1.66	1.35	9.5	2.07	1.35	10.3	2.24	1.35	13.1	2.82	1.36	15.8	3.40	1.36	17.7	3.80	1.37	18.5	3.97	1.37	21.3	4.54	1.37
	70	7.2	1.66	1.27	8.9	2.03	1.29	9.6	2.18	1.30	12.1	2.68	1.33	14.6	3.15	1.36	16.3	3.47	1.38	17.0	3.60	1.38	19.5	4.04	1.41
	80	6.6	1.63	1.19	8.2	1.96	1.22	8.8	2.10	1.23	11.1	2.53	1.28	13.3	2.94	1.32	14.8	3.21	1.36	15.5	3.32	1.37	17.7	3.68	1.41
750	60	7.8	1.65	1.39	9.7	2.05	1.39	10.6	2.22	1.39	13.3	2.79	1.40	16.0	3.37	1.40	17.9	3.77	1.40	18.8	3.94	1.40	21.5	4.51	1.40
	70	7.3	1.63	1.31	9.0	2.00	1.33	9.8	2.15	1.33	12.3	2.65	1.36	14.8	3.12	1.39	16.6	3.44	1.41	17.3	3.58	1.42	19.9	4.01	1.45
	80	6.7	1.60	1.23	8.3	1.92	1.27	9.0	2.06	1.28	11.2	2.48	1.33	13.5	2.87	1.37	15.0	3.13	1.41	15.7	3.24	1.42	17.9	3.58	1.47

Q5RF-X36KA High Speed

		OUTDOOR TEMPERATURE (Deg. F)																							
150	Indoor T.	10			17			20			30			40			47			50			60		
CFM	Deg.	MBH	COP	kW	MBH	COP	kW	MBH	COP	kW	MBH	COP	kW	MBH	COP	kW	MBH	COP	kW	MBH	COP	kW	MBH	COP	kW
1050	60	15.0	2.16	2.04	18.9	2.59	2.14	20.5	2.76	2.18	25.9	3.29	2.31	31.4	3.75	2.45	35.2	4.05	2.55	36.8	4.17	2.59	42.3	4.54	2.73
	70	14.4	2.04	2.07	18.1	2.43	2.18	19.6	2.58	2.23	24.9	3.05	2.39	30.1	3.45	2.55	33.7	3.71	2.67	35.3	3.81	2.71	40.5	4.13	2.88
	80	13.8	1.91	2.12	17.3	2.26	2.24	18.8	2.40	2.30	23.8	2.82	2.48	28.8	3.19	2.65	32.3	3.41	2.78	33.8	3.50	2.83	38.8	3.78	3.01
1200	60	15.2	2.13	2.09	19.0	2.56	2.19	20.7	2.73	2.22	26.2	3.27	2.36	31.8	3.74	2.49	35.7	4.05	2.58	37.3	4.18	2.62	42.9	4.57	2.75
	70	14.6	2.01	2.13	18.3	2.40	2.24	19.9	2.55	2.28	25.2	3.03	2.44	30.5	3.45	2.59	34.2	3.72	2.70	35.8	3.82	2.75	41.1	4.16	2.90
	80	14.0	1.88	2.18	17.6	2.24	2.30	19.1	2.38	2.35	24.2	2.81	2.52	29.3	3.18	2.69	32.8	3.42	2.82	34.3	3.51	2.87	39.4	3.80	3.04
1350	60	15.3	2.09	2.14	19.2	2.53	2.23	20.9	2.70	2.27	26.5	3.24	2.40	32.1	3.73	2.53	36.1	4.04	2.62	37.8	4.17	2.65	43.4	4.57	2.78
	70	14.8	1.99	2.18	18.5	2.38	2.28	20.1	2.54	2.33	25.5	3.02	2.48	30.9	3.45	2.63	34.7	3.72	2.73	36.3	3.83	2.78	41.6	4.17	2.93
	80	14.2	1.87	2.23	17.8	2.22	2.35	19.3	2.36	2.40	24.5	2.80	2.57	29.6	3.17	2.73	33.2	3.41	2.85	34.7	3.51	2.90	39.9	3.81	3.07

Q5RF-X36KA Low Speed

		OUTDOOR TEMPERATURE (Deg. F)																							
100	Indoor T.	10			17			20			30			40			47			50			60		
CFM	Deg.	MBH	COP	kW	MBH	COP	kW	MBH	COP	kW	MBH	COP	kW	MBH	COP	kW	MBH	COP	kW	MBH	COP	kW	MBH	COP	kW
770	60	9.2	1.62	1.67	12.0	2.06	1.70	13.2	2.24	1.72	17.1	2.84	1.77	21.1	3.39	1.83	23.9	3.76	1.86	25.1	3.92	1.88	29.1	4.41	1.93
	70	8.7	1.55	1.64	11.3	1.96	1.69	12.4	2.12	1.71	16.1	2.64	1.79	19.8	3.12	1.86	22.5	3.43	1.92	23.6	3.56	1.94	27.3	3.97	2.02
	80	8.1	1.45	1.63	10.5	1.82	1.69	11.6	1.98	1.72	15.0	2.45	1.80	18.5	2.88	1.89	21.0	3.16	1.95	22.0	3.27	1.97	25.5	3.63	2.06
870	60	9.2	1.59	1.71	12.1	2.03	1.74	13.3	2.21	1.76	17.3	2.81	1.81	21.4	3.37	1.86	24.2	3.74	1.90	25.4	3.90	1.91	29.4	4.40	1.96
	70	8.8	1.53	1.68	11.4	1.93	1.74	12.6	2.10	1.76	16.3	2.62	1.83	20.1	3.10	1.90	22.8	3.42	1.95	23.9	3.55	1.97	27.7	3.96	2.05
	80	8.2	1.44	1.67	10.7	1.81	1.73	11.7	1.96	1.75	15.3	2.43	1.84	18.8	2.86	1.93	21.3	3.14	1.99	22.4	3.26	2.02	25.9	3.61	2.11
970	60	9.4	1.58	1.75	12.3	2.02	1.78	13.5	2.20	1.80	17.5	2.79	1.84	21.6	3.35	1.89	24.4	3.73	1.92	25.6	3.88	1.94	29.7	4.39	1.98
	70	8.9	1.51	1.72	11.6	1.92	1.77	12.7	2.08	1.79	16.5	2.60	1.86	20.4	3.09	1.93	23.1	3.41	1.98	24.2	3.54	2.00	28.0	3.96	2.07
	80	8.3	1.43	1.71	10.8	1.80	1.77	11.9	1.94	1.79	15.5	2.41	1.88	19.0	2.83	1.97	21.5	3.11	2.03	22.6	3.22	2.06	26.2	3.58	2.14

Q5RF-X48KA High Speed

		OUTDOOR TEMPERATURE (Deg. F)																							
200	Indoor T.	10			17			20			30			40			47			50			60		
CFM	Deg.F	MBH	COP	kW	MBH	COP	kW	MBH	COP	kW	MBH	COP	kW	MBH	COP	kW	MBH	COP	kW	MBH	COP	kW	MBH	COP	kW
1350	60	20.0	2.17	2.71	24.8	2.59	2.82	26.9	2.75	2.86	33.7	3.27	3.02	40.6	3.74	3.18	45.4	4.04	3.29	47.4	4.16	3.34	54.3	4.55	3.50
	70	19.3	1.99	2.84	24.0	2.37	2.96	26.0	2.53	3.01	32.6	3.00	3.18	39.3	3.43	3.36	43.9	3.70	3.48	45.9	3.82	3.53	52.6	4.17	3.70
	80	18.8	1.84	2.99	23.3	2.18	3.12	25.2	2.32	3.18	31.6	2.76	3.36	38.1	3.15	3.55	42.6	3.39	3.68	44.5	3.50	3.73	50.9	3.81	3.92
1550	60	20.3	2.15	2.76	25.1	2.57	2.87	27.2	2.74	2.91	34.2	3.28	3.06	41.2	3.76	3.21	46.0	4.08	3.31	48.1	4.21	3.36	55.1	4.61	3.50
	70	19.6	1.98	2.90	24.3	2.37	3.01	26.3	2.53	3.06	33.1	3.01	3.22	39.8	3.46	3.38	44.6	3.74	3.49	46.6	3.86	3.54	53.3	4.22	3.70
	80	19.0	1.82	3.05	23.6	2.18	3.17	25.5	2.32	3.23	32.1	2.77	3.40	38.6	3.17	3.57	43.2	3.43	3.69	45.2	3.54	3.74	51.7	3.87	3.92
1750	60	20.4	2.13	2.81	25.4	2.55	2.91	27.5	2.73	2.96	34.6	3.27	3.10	41.7	3.77	3.24	46.6	4.09	3.34	48.7	4.22	3.39	55.8	4.64	3.53
	70	19.9	1.97	2.95	24.7	2.36	3.06	26.7	2.52	3.11	33.5	3.02	3.26	40.4	3.47	3.41	45.2	3.76	3.52	47.2	3.88	3.57	54.0	4.26	3.72
	80	19.3	1.82	3.11	23.9	2.17	3.22	25.9	2.32	3.27	32.5	2.77	3.44	39.1	3.19	3.60	43.7	3.45	3.71	45.7	3.56	3.76	52.4	3.91	3.93

HEAT PUMP HEATING EXPANDED RATINGS CONTINUED

Q5RF-X48KA Low Speed

100	Indoor T.	10			17			20			30			40			47			50			60		
CFM	Deg.F	MBH	COP	kW	MBH	COP	kW	MBH	COP	kW	MBH	COP	kW	MBH	COP	kW	MBH	COP	kW	MBH	COP	kW	MBH	COP	kW
1000	60	12.7	1.80	2.08	15.8	2.20	2.10	17.1	2.37	2.11	21.5	2.93	2.15	25.8	3.46	2.19	28.9	3.83	2.21	30.2	3.98	2.22	34.6	4.48	2.26
	70	12.2	1.69	2.11	15.0	2.06	2.15	16.3	2.21	2.16	20.4	2.71	2.21	24.5	3.18	2.26	27.4	3.50	2.30	28.7	3.63	2.31	32.8	4.07	2.36
	80	11.6	1.57	2.17	14.3	1.90	2.20	15.5	2.04	2.22	19.4	2.49	2.28	23.3	2.93	2.33	26.0	3.21	2.37	27.2	3.34	2.39	31.0	3.73	2.44
1100	60	12.8	1.77	2.11	15.9	2.18	2.14	17.2	2.35	2.15	21.7	2.91	2.18	26.1	3.45	2.22	29.2	3.82	2.24	30.5	3.98	2.25	34.9	4.49	2.28
	70	12.3	1.67	2.15	15.2	2.04	2.18	16.5	2.19	2.20	20.6	2.69	2.25	24.8	3.17	2.29	27.7	3.50	2.33	29.0	3.63	2.34	33.2	4.07	2.39
	80	11.7	1.56	2.20	14.4	1.89	2.24	15.6	2.03	2.25	19.6	2.49	2.31	23.6	2.92	2.37	26.3	3.21	2.40	27.5	3.33	2.42	31.5	3.73	2.48
1200	60	12.9	1.76	2.15	16.0	2.16	2.17	17.4	2.34	2.18	21.8	2.89	2.21	26.3	3.44	2.24	29.4	3.81	2.27	30.8	3.97	2.27	35.2	4.48	2.30
	70	12.4	1.66	2.18	15.3	2.03	2.22	16.6	2.19	2.23	20.8	2.69	2.28	25.1	3.17	2.32	28.0	3.49	2.35	29.3	3.63	2.37	33.5	4.08	2.41
	80	11.8	1.55	2.23	14.6	1.89	2.27	15.8	2.02	2.29	19.8	2.48	2.34	23.7	2.91	2.40	26.5	3.19	2.44	27.7	3.32	2.45	31.7	3.71	2.51

Q5RF-X60KA High Speed

		OUTDOOR TEMPERATURE (Deg. F)																							
200	Indoor T.	10			17			20			30			40			47			50			60		
CFM	Deg.F	MBH	COP	kW	MBH	COP	kW	MBH	COP	kW	MBH	COP	kW	MBH	COP	kW	MBH	COP	kW	MBH	COP	kW	MBH	COP	kW
1500	60	22.8	2.15	3.10	29.4	2.56	3.36	32.2	2.72	3.47	41.6	3.18	3.85	51.1	3.55	4.22	57.7	3.78	4.48	60.5	3.86	4.59	70.0	4.13	4.97
	70	21.9	1.95	3.30	28.4	2.33	3.58	31.2	2.47	3.70	40.5	2.90	4.10	49.8	3.24	4.50	56.2	3.45	4.78	59.0	3.54	4.90	68.3	3.78	5.30
	80	21.4	1.78	3.52	27.7	2.13	3.82	30.5	2.26	3.95	39.5	2.64	4.38	48.6	2.96	4.82	55.0	3.15	5.12	57.7	3.22	5.25	66.7	3.45	5.68
1700	60	23.0	2.14	3.14	29.7	2.57	3.39	32.6	2.73	3.50	42.1	3.20	3.86	51.7	3.60	4.21	58.4	3.84	4.46	61.3	3.93	4.57	70.8	4.21	4.93
	70	22.2	1.95	3.34	28.8	2.34	3.61	31.6	2.49	3.72	41.0	2.93	4.10	50.3	3.29	4.48	56.9	3.51	4.75	59.7	3.60	4.86	69.1	3.86	5.24
	80	21.6	1.78	3.57	28.1	2.13	3.86	30.8	2.27	3.98	40.0	2.67	4.39	49.2	3.01	4.79	55.6	3.21	5.08	58.4	3.29	5.20	67.5	3.53	5.61
1900	60	23.1	2.12	3.19	29.9	2.55	3.43	32.8	2.72	3.54	42.5	3.21	3.89	52.2	3.62	4.23	59.0	3.86	4.48	61.9	3.96	4.58	71.6	4.26	4.93
	70	22.6	1.95	3.40	29.2	2.34	3.65	32.0	2.50	3.76	41.5	2.95	4.13	50.9	3.32	4.49	57.5	3.55	4.75	60.3	3.64	4.86	69.8	3.92	5.22
	80	21.9	1.77	3.62	28.4	2.14	3.89	31.2	2.28	4.01	40.4	2.70	4.40	49.7	3.04	4.79	56.2	3.26	5.06	58.9	3.34	5.17	68.2	3.59	5.56

Q5RF-X60KA Low Speed

		OUTDOOR TEMPERATURE (Deg. F)																							
150	Indoor T.	10			17			20			30			40			47			50			60		
CFM	Deg.F	MBH	COP	kW	MBH	COP	kW	MBH	COP	kW	MBH	COP	kW	MBH	COP	kW	MBH	COP	kW	MBH	COP	kW	MBH	COP	kW
1075	60	15.2	1.83	2.44	19.8	2.29	2.53	21.7	2.48	2.57	28.2	3.07	2.69	34.7	3.62	2.81	39.2	3.97	2.90	41.1	4.11	2.93	47.6	4.57	3.05
	70	14.6	1.69	2.54	19.0	2.11	2.63	20.8	2.29	2.67	27.1	2.83	2.81	33.4	3.32	2.95	37.7	3.63	3.04	39.6	3.76	3.09	45.9	4.17	3.22
	80	14.0	1.55	2.65	18.2	1.94	2.75	20.0	2.10	2.80	26.1	2.60	2.95	32.1	3.04	3.09	36.3	3.33	3.20	38.1	3.45	3.24	44.2	3.82	3.39
1175	60	15.4	1.81	2.49	20.0	2.27	2.57	21.9	2.47	2.61	28.5	3.07	2.72	35.1	3.62	2.84	39.7	3.98	2.92	41.6	4.13	2.96	48.2	4.60	3.07
	70	14.8	1.67	2.59	19.2	2.10	2.68	21.1	2.28	2.72	27.4	2.83	2.85	33.8	3.33	2.98	38.2	3.65	3.07	40.1	3.78	3.11	46.4	4.21	3.24
	80	14.2	1.54	2.70	18.5	1.93	2.80	20.3	2.10	2.84	26.4	2.60	2.98	32.5	3.06	3.12	36.8	3.35	3.22	38.7	3.47	3.26	44.8	3.86	3.41
1275	60	15.5	1.79	2.54	20.1	2.26	2.61	22.1	2.45	2.65	28.8	3.06	2.76	35.4	3.62	2.87	40.1	3.98	2.95	42.1	4.14	2.98	48.7	4.62	3.10
	70	15.0	1.67	2.63	19.4	2.10	2.72	21.4	2.27	2.76	27.8	2.83	2.88	34.2	3.33	3.01	38.7	3.66	3.09	40.6	3.80	3.13	47.0	4.23	3.26
	80	14.4	1.53	2.74	18.7	1.93	2.84	20.5	2.09	2.88	26.7	2.60	3.02	32.9	3.06	3.15	37.2	3.36	3.25	39.1	3.48	3.29	45.2	3.87	3.43

USA DESIGNED & ASSEMBLED

Intertek

AHRI CERTIFIED™ www.ahridirectory.org Unitary Small HP AHRI Standard 210/240

We Encourage Professionalism — Through Technician Certification by NATE

ENERGY STAR PARTNER

HRAI MEMBER COMPANY

MAYTAG®

Before purchasing this appliance, read important energy cost and efficiency information available from your retailer. Specifications and illustrations subject to change without notice and without incurring obligations.

®Registered Trademark/™Trademark of Maytag Properties, LLC or its related companies. ©2014. All rights reserved. Manufactured under license by NORDYNE, O'Fallon, MO.

008E-0114 **(Replaces 008E-1112)**

Printed in U.S.A. (01/14)