WIRING DIAGRAM

Two Stage Split System Heat Pump (Outdoor Section) With ECM Fan Motor

208/230V Single Phase / 60 Hz.

NOTES:

1. Disconnect all power before servicing.
2. For supply connections use copper conductors only.
3. Not suitable on systems that exceed 150 volts to ground.
4. For replacement wires use conductors suitable for 105°C.
5. For ampacities and overcurrent protection, see unit rating plate.
6. Connect to 24 vac/40va/class 2 circuit. See furnace/airhandler installation. instructions for control circuit and optional relay/transformer kits.
7. Caution: The Low Voltage wiring shall NOT be grounded to this unit.

1. Couper le courant avant de faire letretien.
2. Employez uniquement des conducteurs en cuivre.
3. Ne convient pas aux installations de plus de 150 volt a la terre.

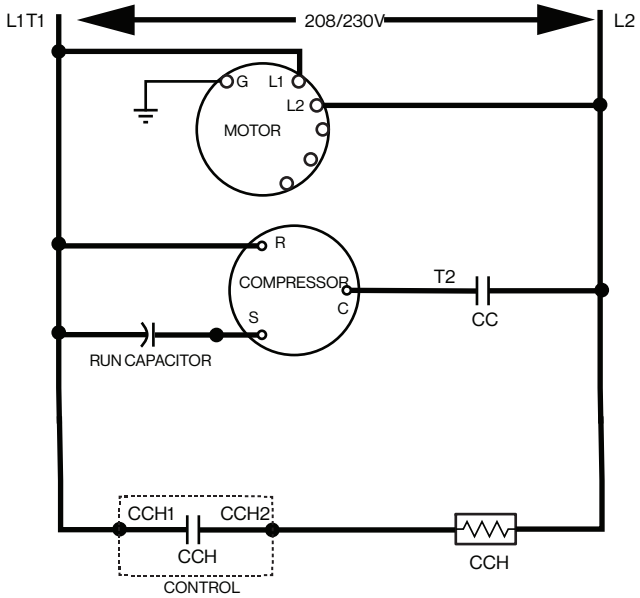

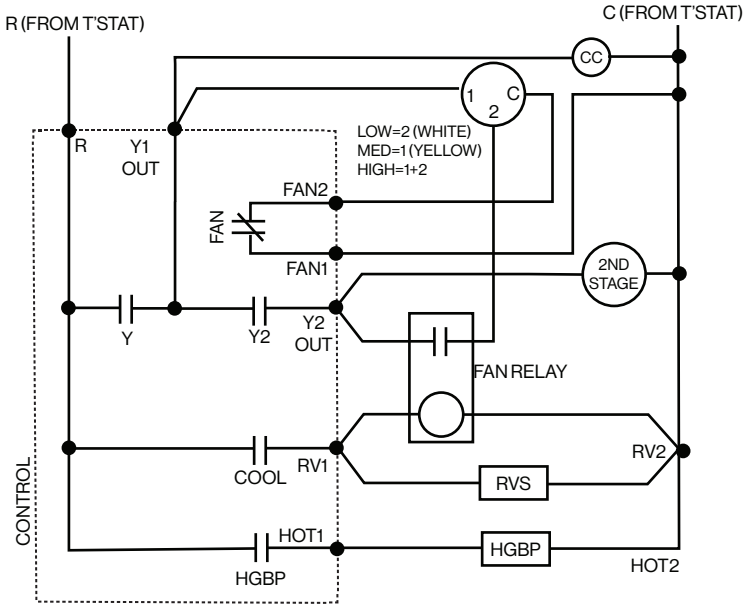

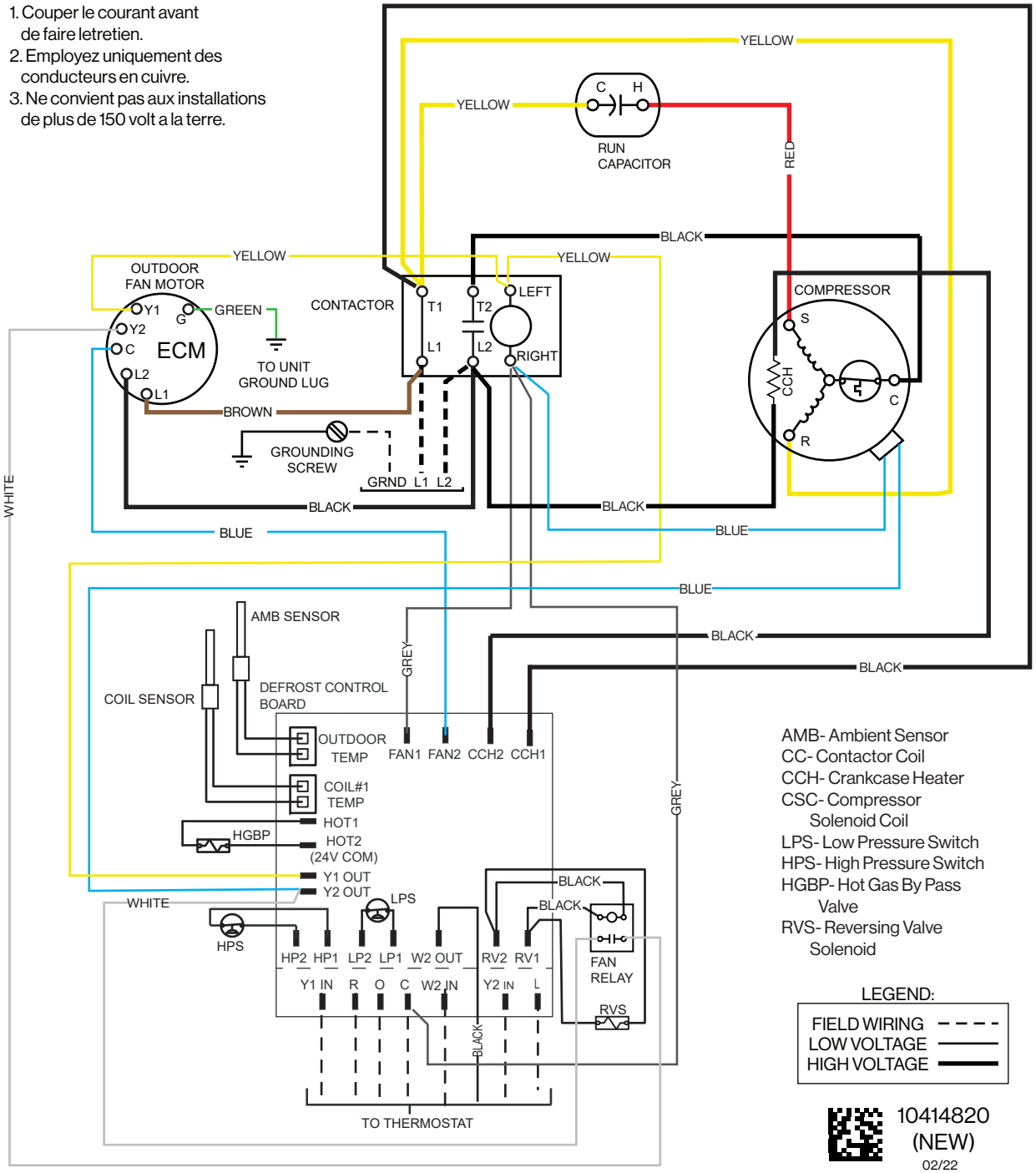

AMB- Ambient Sensor
CC- Contactor Coil
CCH- Crankcase Heater
CSC- Compressor Solenoid Coil
LPS- Low Pressure Switch
HPS- High Pressure Switch
HGBP- Hot Gas By Pass Valve
RVS- Reversing Valve Solenoid

LEGEND:

FIELD WIRING	- - - -
LOW VOLTAGE	———
HIGH VOLTAGE	▬▬▬

10414820 (NEW)
02/22