WIRING DIAGRAM

015H, 017H

⚠ WARNING Switch circuit breaker to the "off" position before servicing the furnace.

Notes :

1) See unit data label for recommended supply wire sizes.
2) Thermostat anticipator setting : 0.40 Amps
3) Secure 24V connections to thermostat wires with wire nuts and seal with approved electrical tape.
4) When using a relay box refer to the relay box installation wiring diagram for thermostat connections.
5) If any wire in this unit is to be replaced it must be replaced with 105° C thermoplastic copper wire of the same gauge.
6) Not suitable for use on systems exceeding 120V to ground

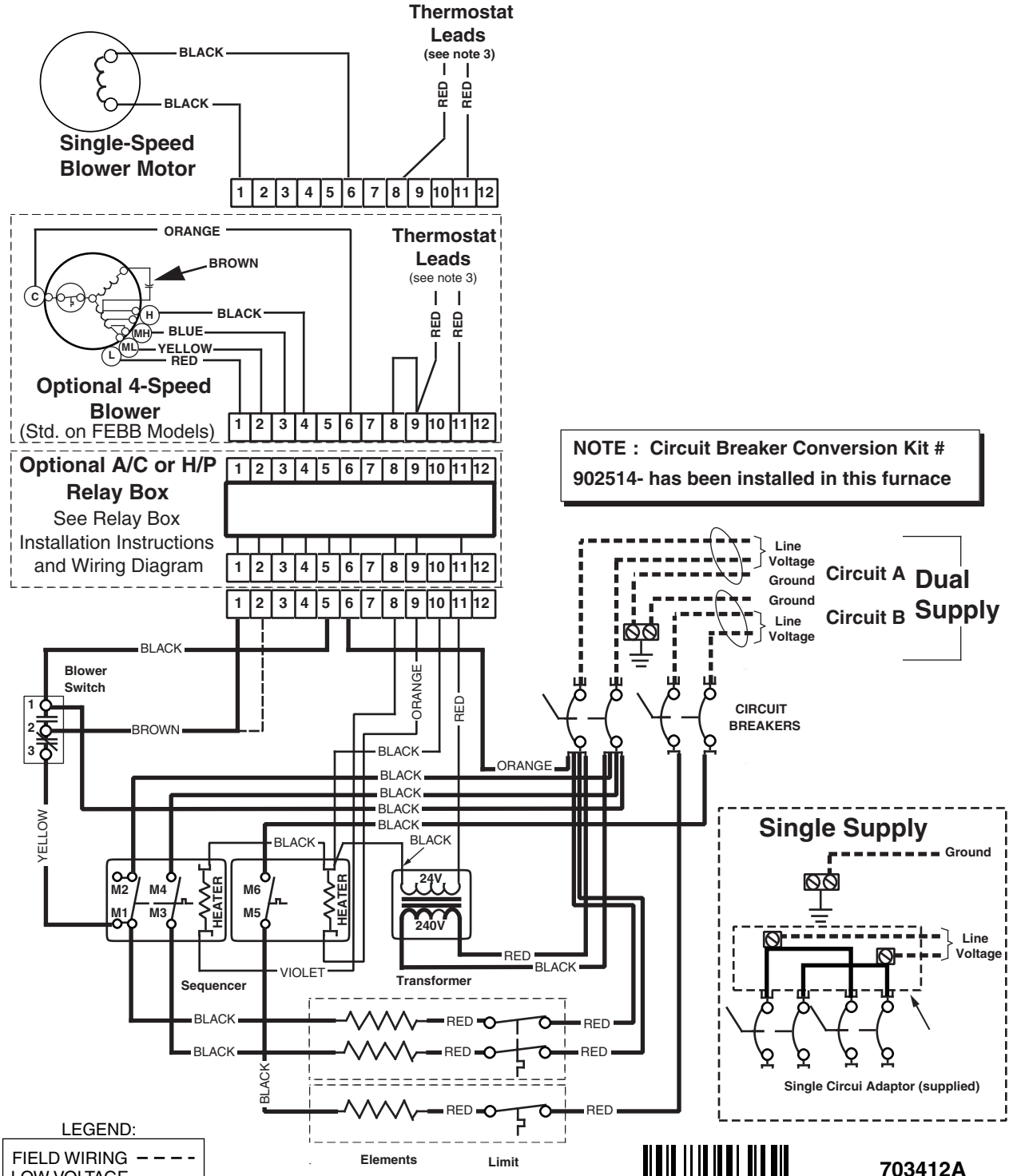

703412A
(Replaces 7034120)
03/15