INSTALLATION INSTRUCTIONS

Replacement HSI Control for CMF-PG Furnaces
P/N 902922

INSTALLATION SEQUENCE

1. Disconnect electrical power.
2. Remove the Honeywell Hot Surface Ignition Control from the top of the control box located on the burner assembly (See Figure 1).
3. Remove the Time Delay Relay and the Motor Relay inside control box located on burner assembly (See Figure 1).
4. Install the new control onto the control box cover and wire (See Figure 2).

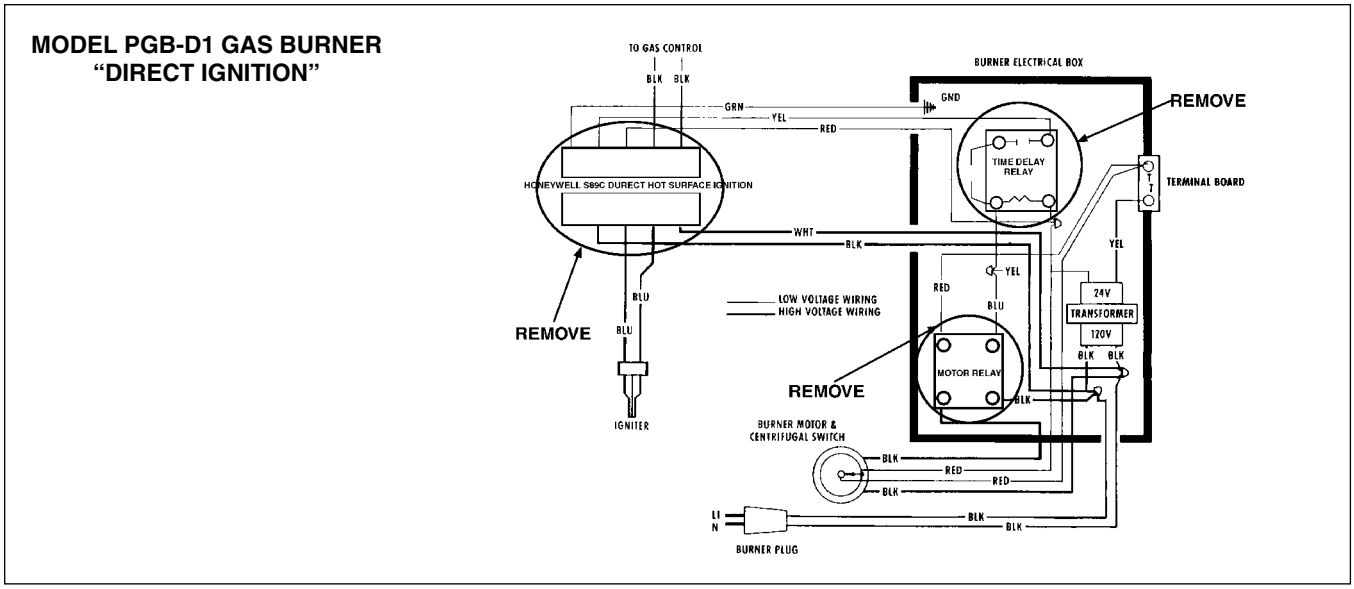

Figure 1. Old Assembly

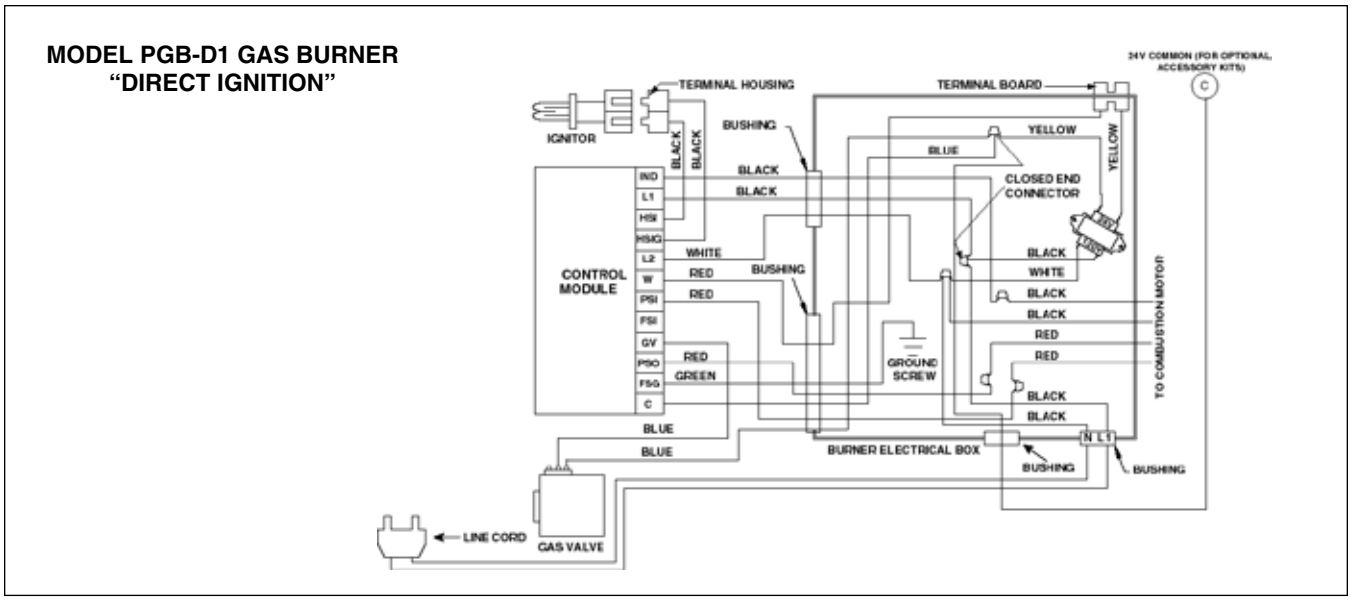

Figure 2. New Assembly

Specifications & illustrations subject to change without notice or incurring obligations (06/15).
O'Fallon, MO, © Nortek Global HVAC LLC 2015. All Rights Reserved.

7074800 (NEW)