WIRING DIAGRAM

For Upflow and Downflow Residential 80+ Furnace with Variable Speed Blower

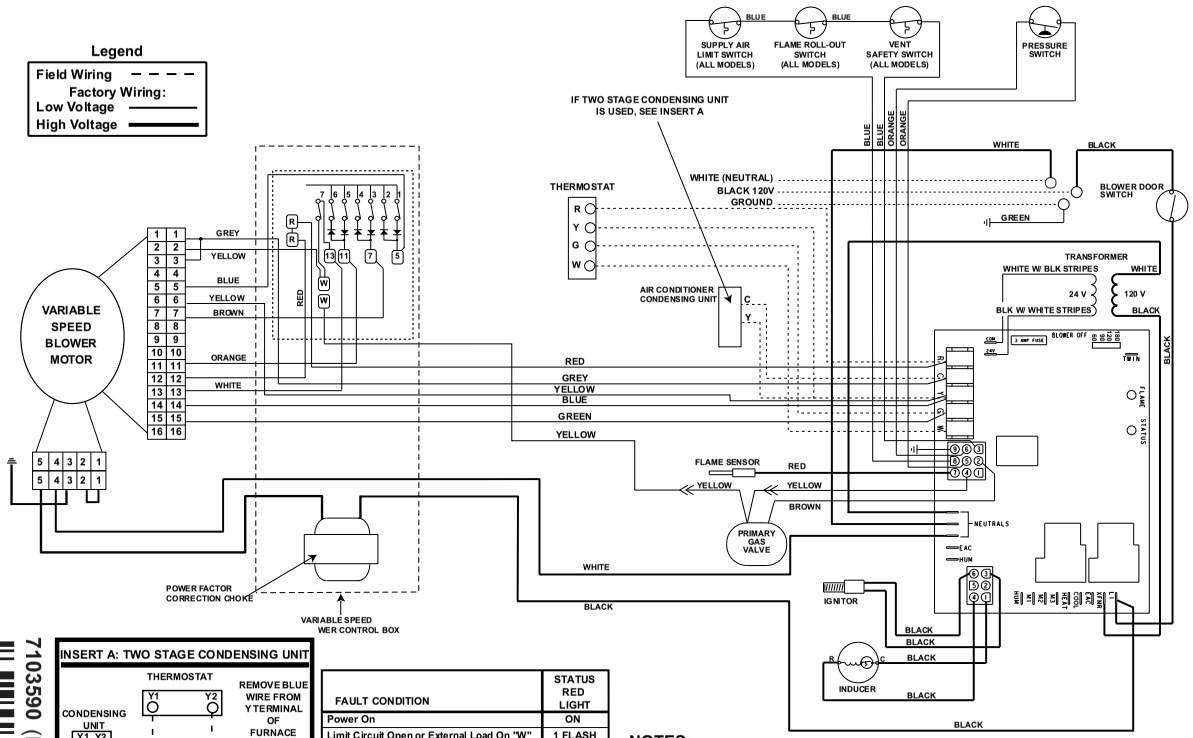

INSERT A: TWO STAGE CONDENSING UNIT

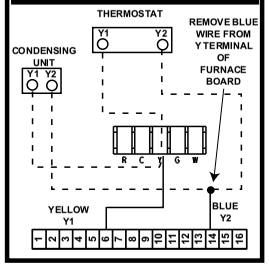

FAULT CONDITION	STATUS RED LIGHT
Power On	ON
Limit Circuit Open or External Load On "W"	1 FLASH
Pressure Switch is Open with Inducer On	2 FLASHES
Pressure Switch is Closed with Inducer Off	3 FLASHES
Ignition Failure (Check Ground)	4 FLASHES
115 VAC & Neutral Reversed or no Ground	5 FLASHES
False Flame or Gas Valve Relay Shorted	Continuous
Power Off	OFF

FAULT CONDITION	FLAME YELLOW LIGHT
Low Flame Sensor Signal	Continuous
	Flash
Flame Present	ON

NOTES:

1. Use copper conductors only.
2. If any of the original wire as supplied with the furnace must be replaced, it must be replaced with wiring material having a temperature rating of at least 105 C.
3. Refer to the Installation Instructions provided with the furnace for the appropriate heating and cooling speed settings for your application.
4. Ensure that wires from the blower remain connected to the board thermostat terminals after making the field thermostat connections.

7103590 (Replaces 710192A)