WIRING DIAGRAM

Split System Air Conditioner (Outdoor Section) — Single Phase

NOTES:

1. Disconnect all power before servicing.
2. For supply connections use copper conductors only.
3. Not suitable on systems that exceed 150 volts to ground.
4. For replacement wires use conductors suitable for 105 deg C.
5. For ampacities and overcurrent protection, see unit rating plate.
6. Connect to 24 vac/40ca/class 2 circuit. See furnace/airhandler installation instructions for control circuit and optional relay/transformer kits.
7. Anti-Short Cycle Timer (ASCT) may or may not be installed in the unit. If desired, ASCT is factory installed on select models only or may be field installed as shown using manufacturer's approved kit. If not present, connect Yellow and Black wires per Note 6.

1. Couper le courant avant de faire letretien.
2. Employez uniquement des conducteurs en cuivre.
3. Ne convient pas aux installations de plus de 150 volt a la terre.

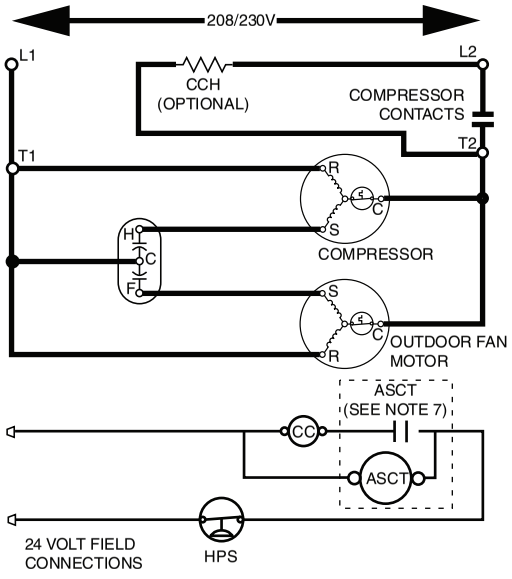

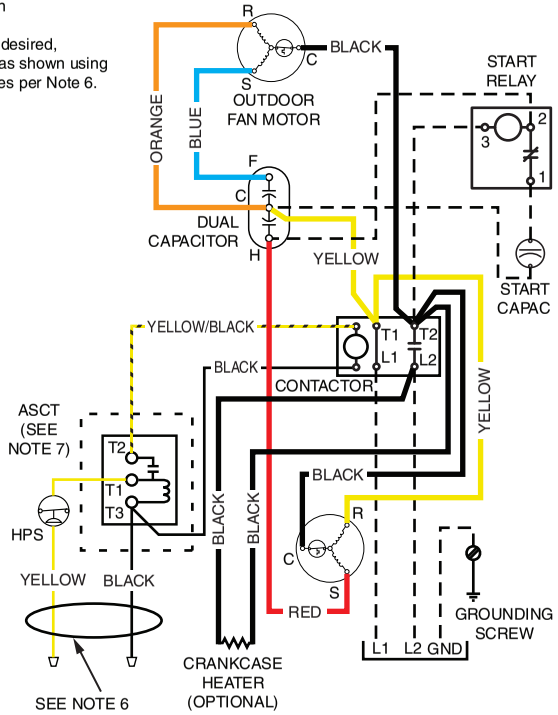

CC - Contactor Coil
CCH - Crankcase Heater
HPS - High Pressure Switch

LEGEND:

FIELD WIRING	- - -
LOW VOLTAGE	———
HIGH VOLTAGE	▬▬▬

710388C
(Replaces 710388B)
7/19