WIRING DIAGRAM

Fixed Speed High Efficiency Blower Kit
Single Stage Furnaces

Refer to the Installation Instructions provided with the kit for the proper heating and cooling speeds for your application.

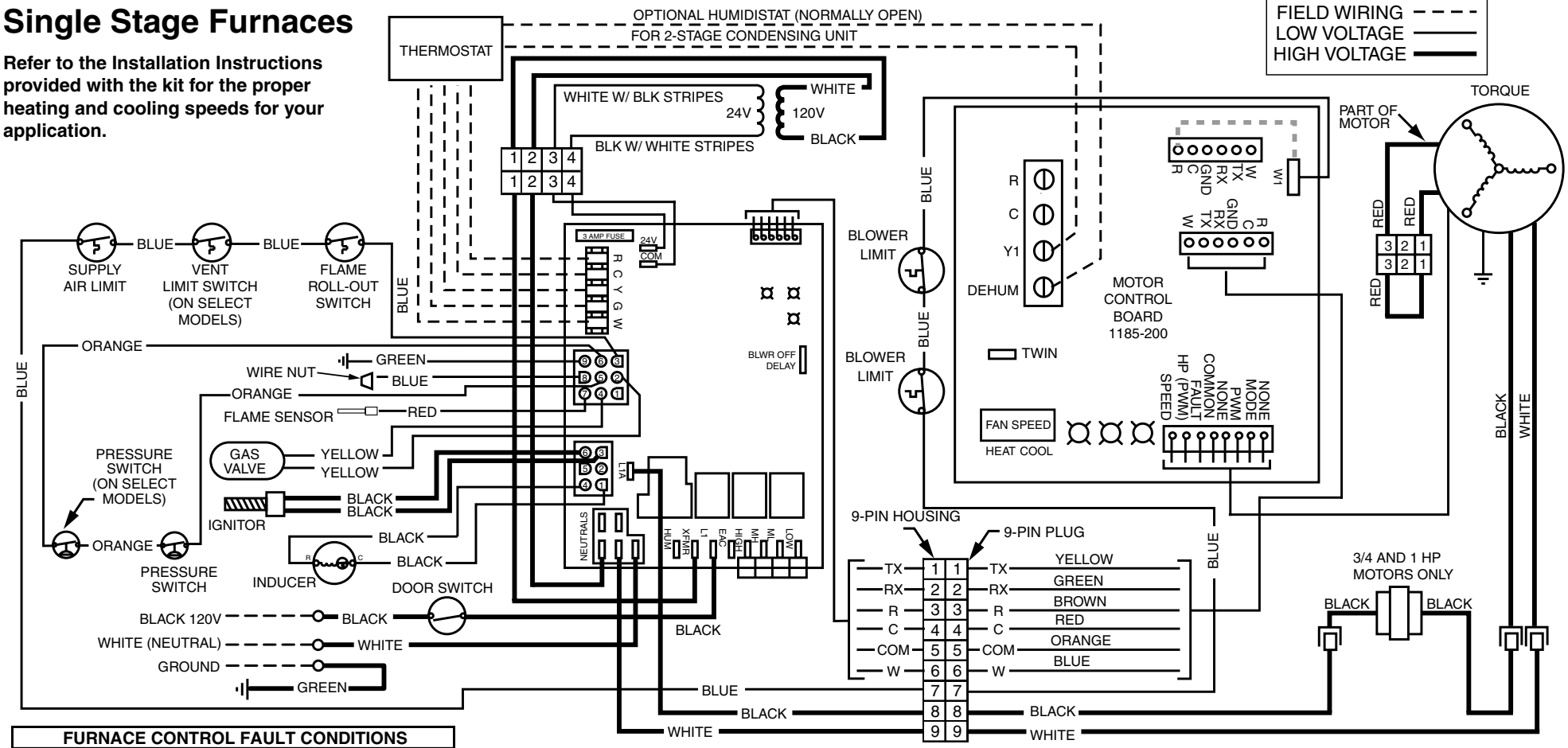

FURNACE CONTROL FAULT CONDITIONS		
Diagnostic Description	**Green LED**	**Red LED**
Control Fault (No Power)	Off	Off
L1 / Neutral Polarity Fault	Flash	Flash
1 Hour Lockout	Alternating Flash	
Normal Operation	On	On
Pressure Switch Closed Fault	On	Flash
Pressure Switch Open Fault	Flash	On
Open Limit Switch Fault	Flash	Off
Diagnostic Description	**Yellow LED**	
Low Flame Sensor Signal	Continuous Flash	
Flame Present	On	

MOTOR CONTROL FAULT CONDITIONS		
Diagnostic Description	**Red LED (AN1)**	**Green LED (AN2)**
Control Fault (No Power)	Off	Off
Normal Operation	On	On
Motor Fault	On	Flash
No Motor Fault	Flash	On
Communications Fault	Flash	Flash

If any of the original wire as supplied with the furnace must be replaced, it must be replaced with wiring material having a temperature rating of at least 105° C.

Use copper conductors only.

710798D
REPLACES 710798C
0908