WIRING DIAGRAM

Q6SP Series Convertible Packaged/Electric Heat Pump 208-230/460 Volt Three Phase 60 Hz.

NOTES:

1. Disconnect all power before servicing.
2. For supply connections use copper conductors only.
3. If any of the original wire as supplied with the furnace must be replaced, it must be replaced with wiring material having a temperature rating of at least 105C.
4. For supply wire ampacities and overcurrent protection, see unit rating label.
5. For "C" Series Models only. For 208V operation remove wire from 230V tap and place on 208V tap.

1. Couper le courant avant de faire letretien.
2. Employez uniquement des conducteurs en cuivre.

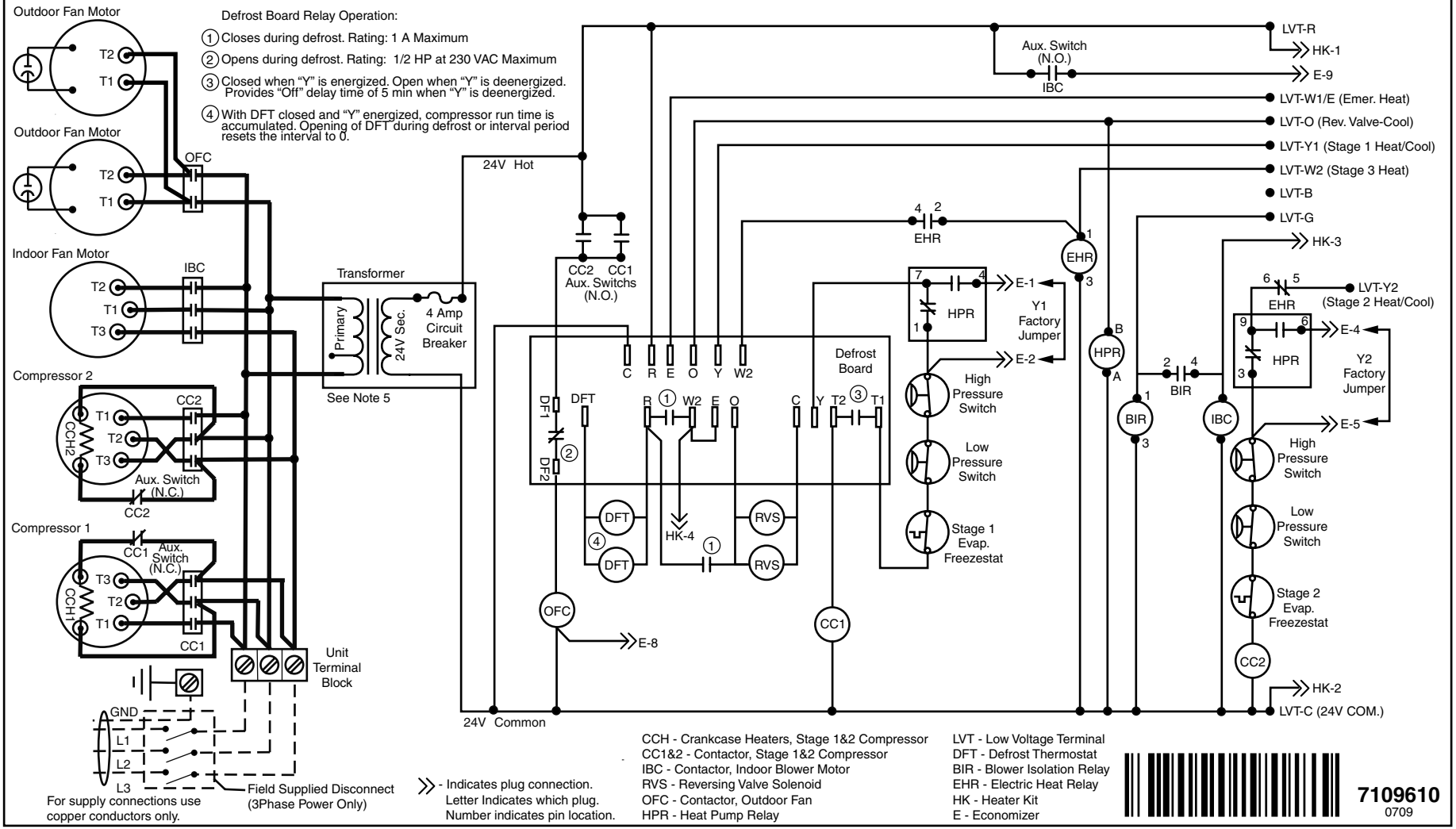

7109610
0709