WIRING DIAGRAM

Split System Air Conditioner (Outdoor Section) With ECM Outdoor Motor

208/230V **Single Phase / 60 Hz.**

NOTES:

1. **Disconnect all power before servicing.**
2. **For supply connections use copper conductors only.**
3. **Not suitable on systems that exceed 150 volts to ground.**
4. **For replacement wires use conductors suitable for 105°C.**
5. **For ampacities and overcurrent protection, see unit rating plate.**
6. **Connect to 24 vac/40va/class 2 circuit. See furnace/air handler installation instructions for control circuit and optional relay/transformer kits.**

1. Couper le courant avant de faire letretien.
2. Employez uniquement des conducteurs en cuivre.
3. Ne convient pas aux installations de plus de 150 volt a la terre.

Status LED	Status LED Description	Lockout Level	Lockout Indication
Normal Run; Solid Yellow	Normal Operation, no trip	N/A	N/A
Code 1; Yellow Flash 1	**Long Run Time.** Compressor running extremely long run cycle. (disabled in HP mode.)	N/A	N/A
Code 2; Yellow Flash 2	**Comprsesor Pressure Trip.** Disch. or suct. pressure out of limits or compressor overloaded.	4 cons, 10x total	Red: Flash 2
Code 3; Yellow Flash 3	**Short Cycling.** Compressor is running only briefly.	4 cons, 10x total	Red: Flash 3
Code 4; Yellow Flash 4	**Locked Rotor.**	10 consecutive	Red: Flash 4
Code 5; Yellow Flash 5	**Compressor Moderate Run.** Compressor runs >15min, then trips >7min.	4 cons, 10x total	Red: Flash 5
Code 9; Red Flash 19	**Over Current Protection.** PROT terminal has >2A input for more than 40ms	1 Occurrence	Red: Flash 9
Trip; Solid Red	Demand but compressor is not running	N/A	N/A

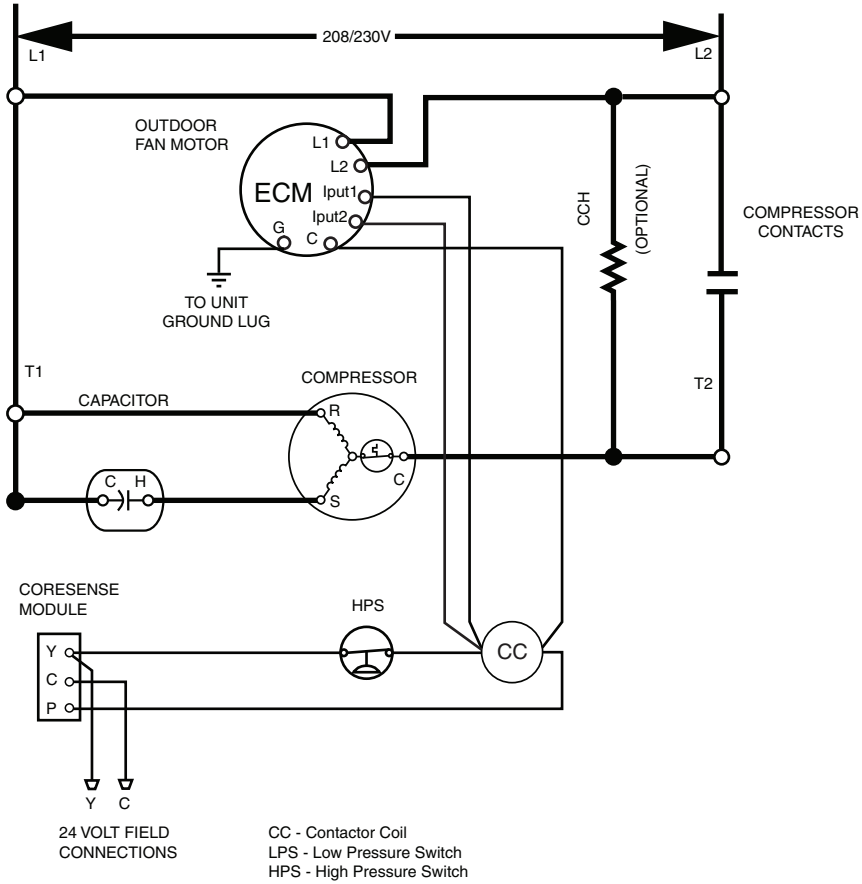

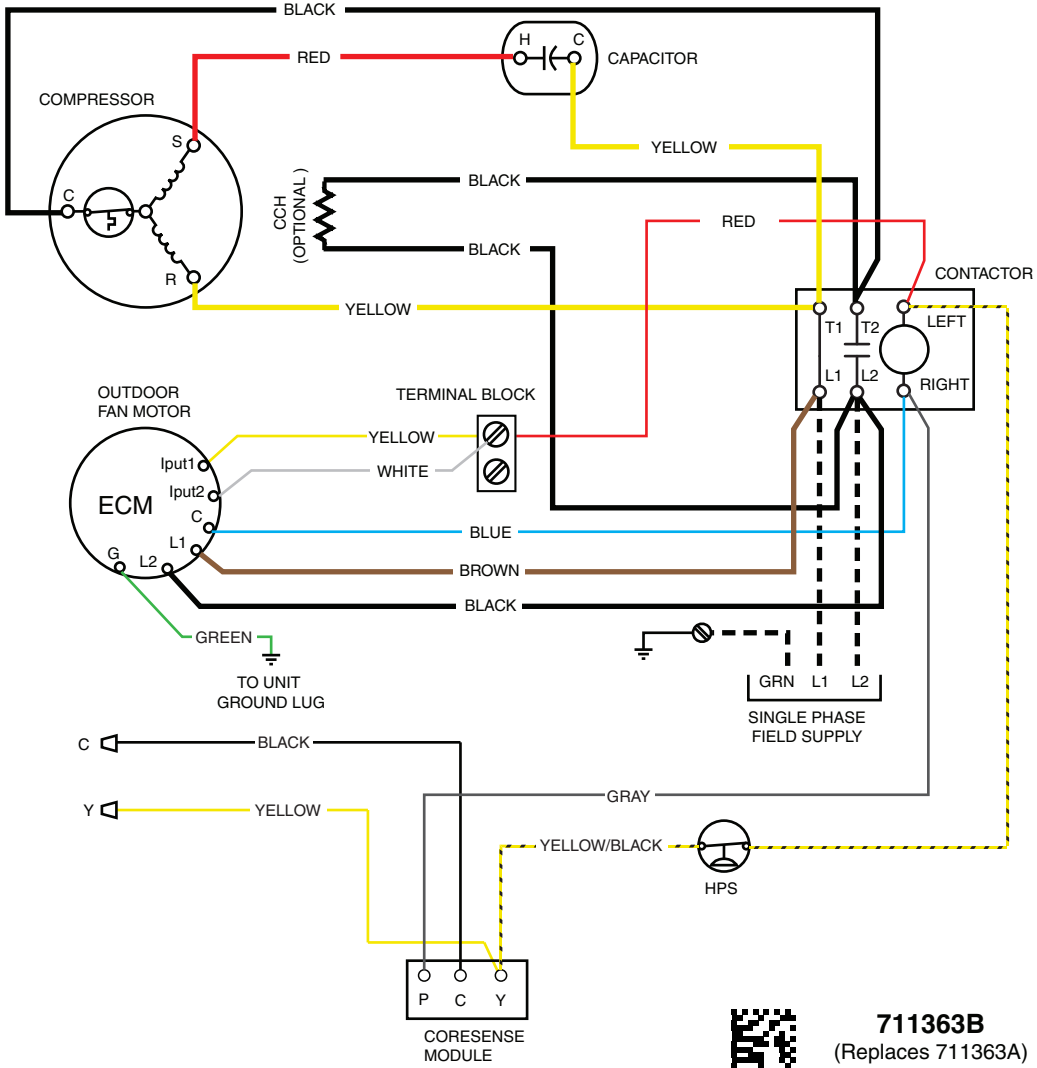

LEGEND:

FIELD WIRING - - - -
LOW VOLTAGE ———
HIGH VOLTAGE ━━━

711363B
(Replaces 711363A)
10/19